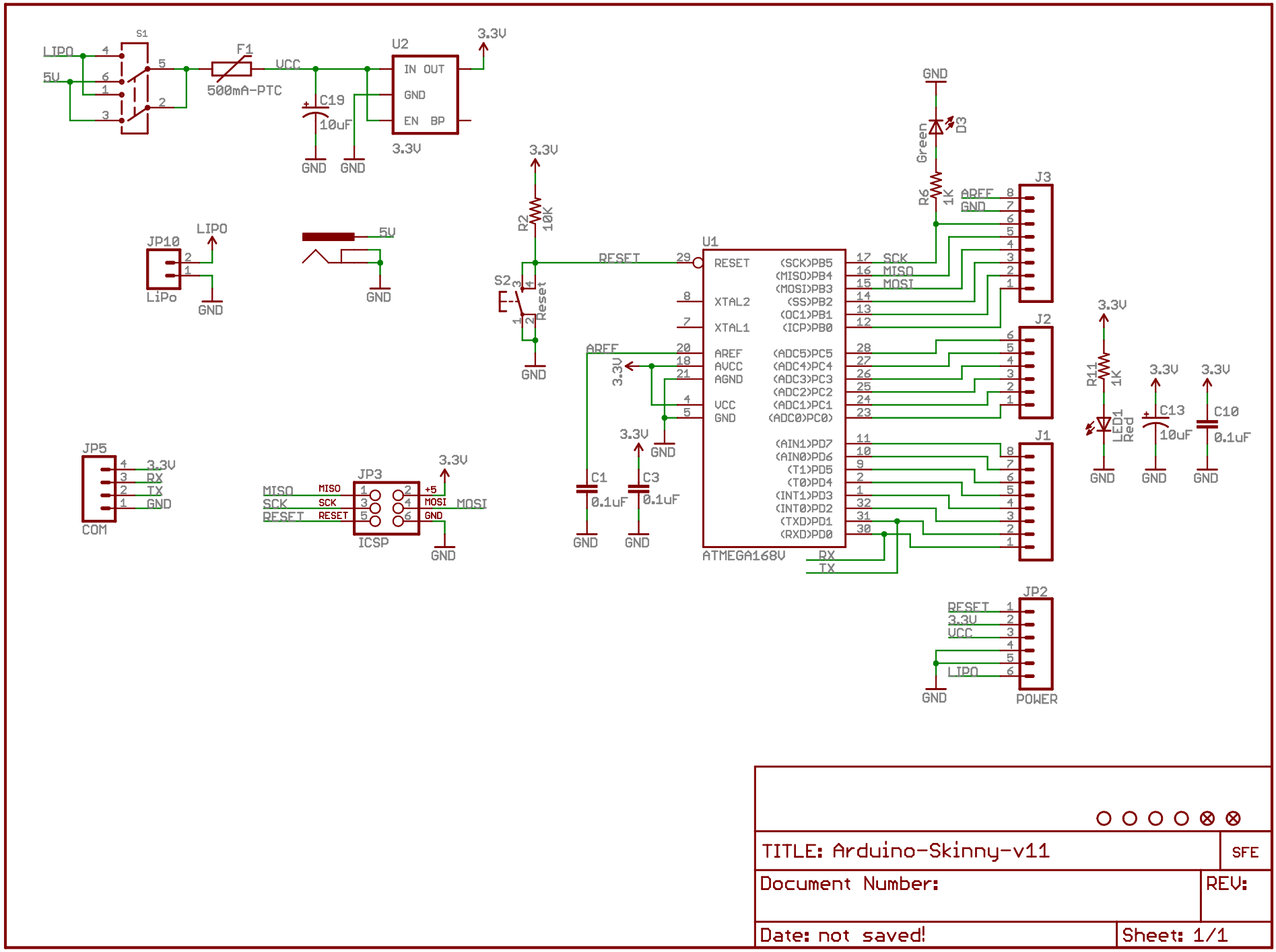

TITLE: Arduino-Skinny-v11

SFE

Document Number:

REV:

Date: not saved!

Sheet: 1/1