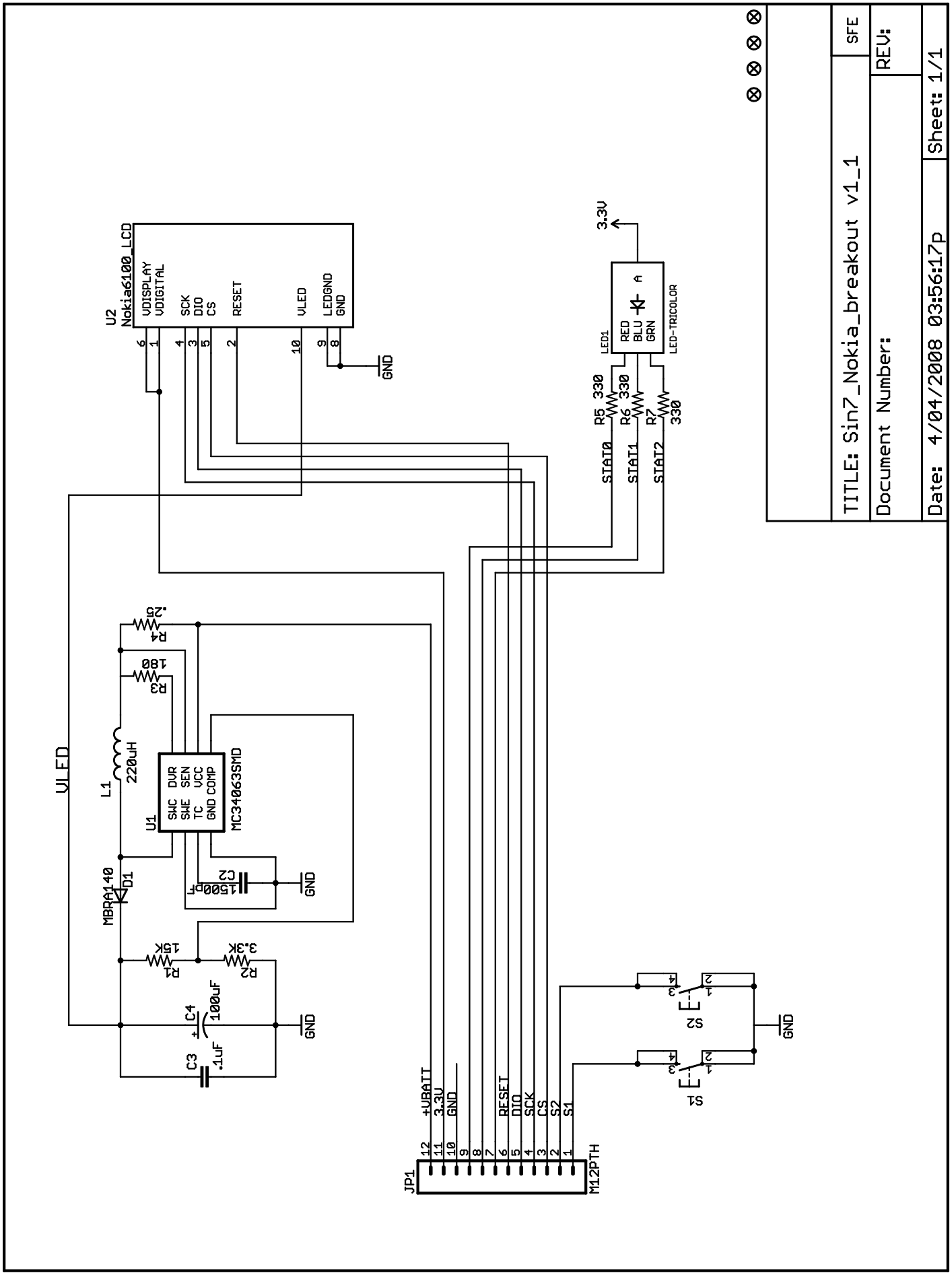
U2
Nokia6100_LCD
VDISPLAY
VDIGITAL
SCK
DIO
CS
RESET
VLED
LEDGND
GND
6
1
4
3
5
2
10
9
8
GND
3.3V
LED1
RED
BLU
GRN
A
LED-TRICOLOR
R5 330
R6 330
R7 330
STAT0
STAT1
STAT2
VLED
R4 .25
R3 180
L1 220uH
U1
SWC DVR
SWE SEN
TC VCC
GND COMP
MC34063SMD
MBRA140
D1
C2 1500pF
GND
R1 15K
R2 3.3K
C4 100uF
C3 .1uF
GND
JP1
M12PTH
12 +VBATT
11 3.3V
10 GND
9
8
7
6 RESET
5 DIO
4 SCK
3 CS
2 S2
1 S1
S1
S2
GND
TITLE: Sin7_Nokia_breakout v1_1
SFE
Document Number:
REV:
Date: 4/04/2008 03:56:17p
Sheet: 1/1