NO	DESCRIPTION	MATERIAL	Q'TY	WEIGHT	FINSHING
1	CASE	L.C.P	1		
2	COVER	German Silver	1		
3	STEM B	L.C.P	1		
4	STEM A	L.C.P	1		
5	CONTACT	Stainless	1		
6	CONTACT	Stainless	1		
7	TERMINAL	Phosphor Bronze	1		

A4 210 X 297

Without any banned substance!
Compliance with RoHS

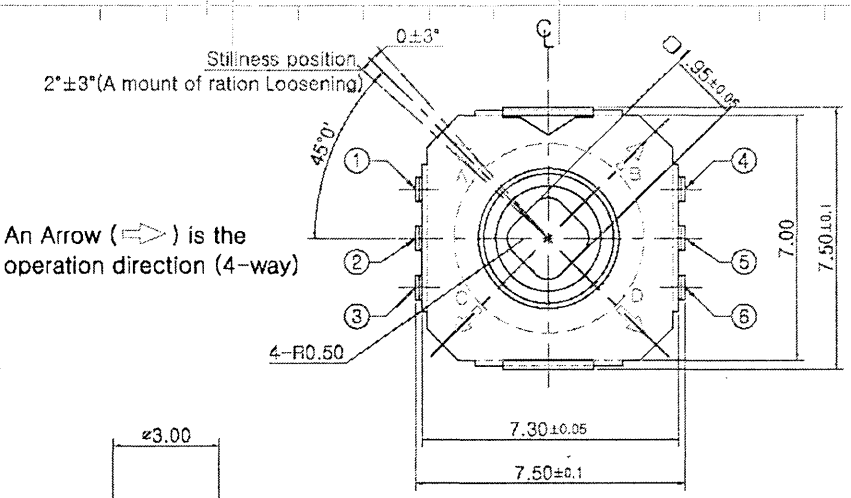

An Arrow (⇨) is the operation direction (4-way)

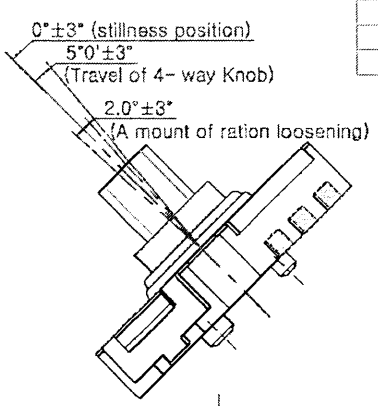

PCB board land Dimessions

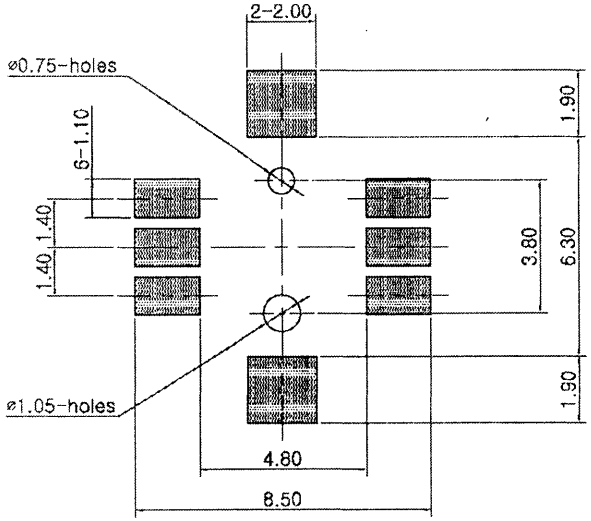

FRAME

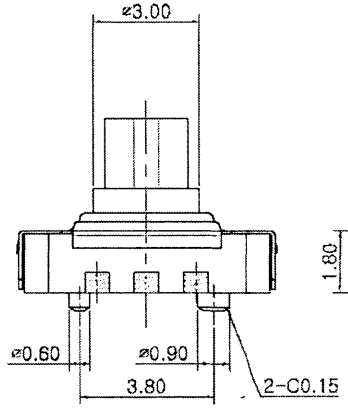

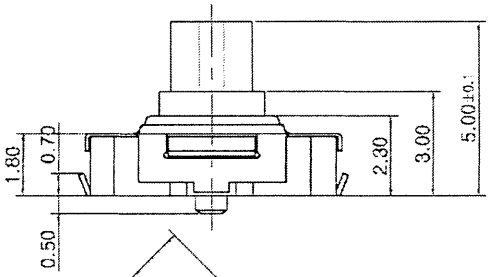

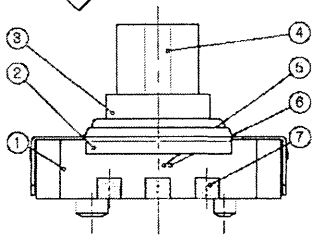

REVDATE

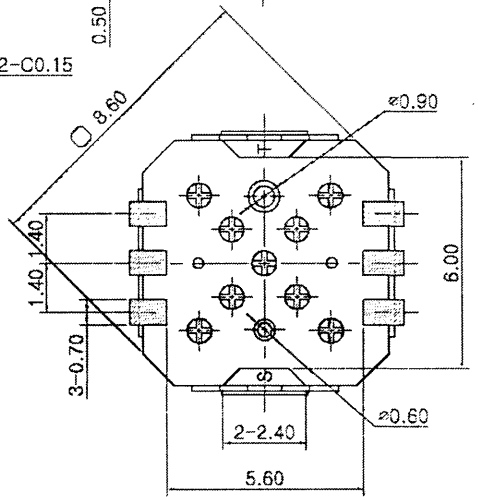

CIRCUIT DIAGRAM

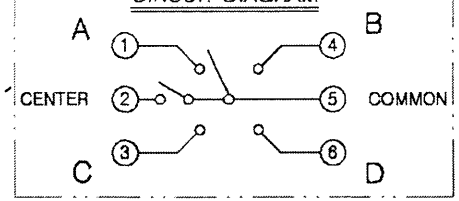

NOTES

1. RATING : DC 12V MAX. , 50mA
2. TRAVEL : 1) 4-DIRECTIONAL : 0.25 ±0.1mm
   2) CENTER : 0.15 ±0.1mm
3. OPERATING FORCE : 1) 4- DIRECTIONAL : 130 ±50gf
   2) CENTER : 240 ±50gf
4. INSERT CONTACT RESISTANCE : 500mΩ MAX.
5. LIFE TIME: 100,000 CYCLES Min
6. NON SPECIFIED DIMENSIONS TOLERANCE : ± 0.2

GENERAL TOLERANCE	1	2	3
0 - 4	±0.05	±0.1	±0.2
4 - 16	±0.08	±0.15	±0.3
16 - 64	±0.12	±0.25	±0.5
64 - 250	±0.25	±0.4	±0.8

UNIT	mm
SCALE	5/1
PAPER	297 X 210 A4
PAGE	1-1

DRAWING CHECKED DESIGN APPROVED

MODEL NAME : SF303GJ26

TITEL : MULTY WAY S/W ASS'Y

DRAWING NUMBER :

DATE :

NAME

MARK	REVISION	DESCRIPTION	DATA	NAME	REMARK
2					
1					