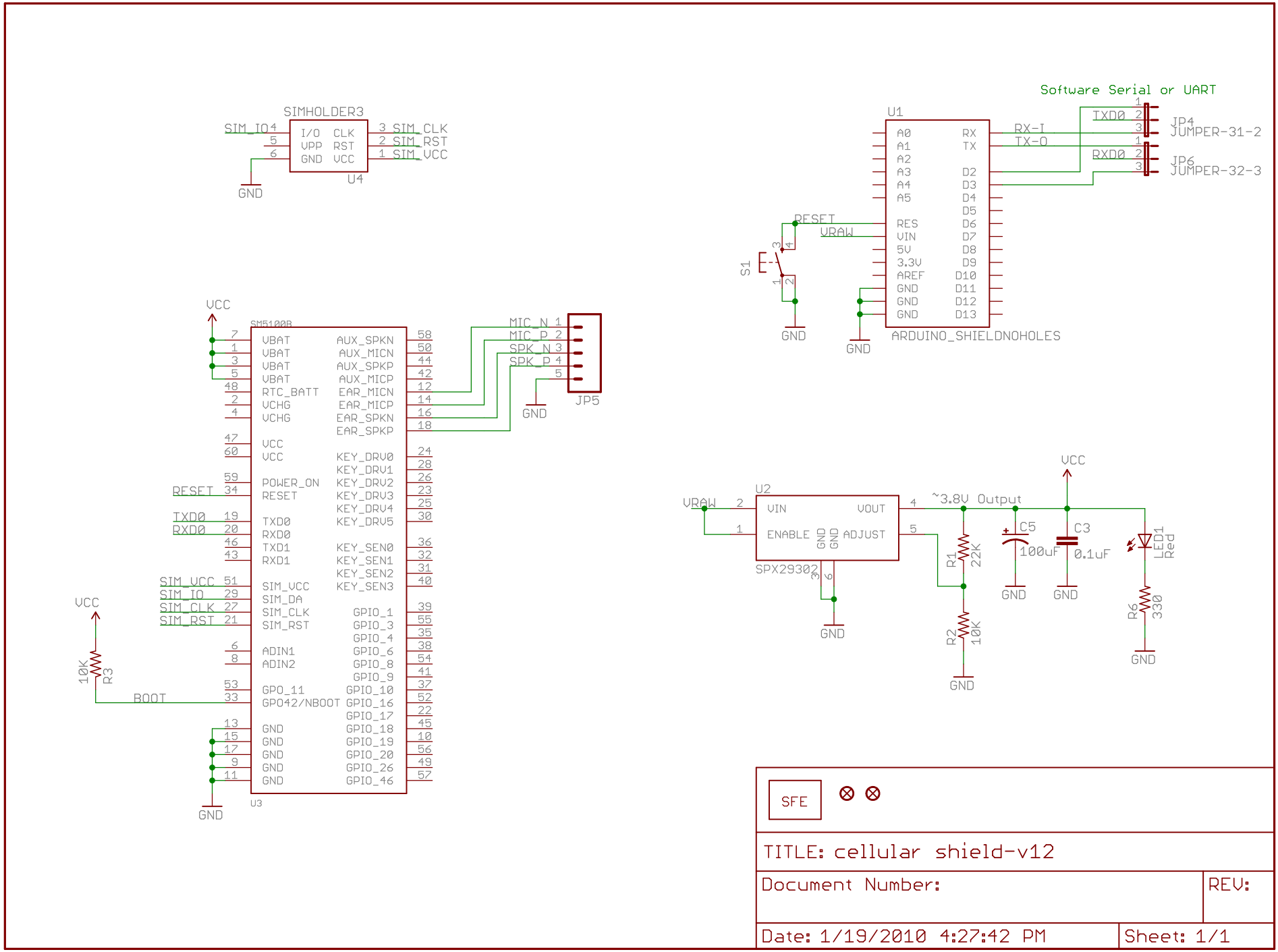
SIMHOLDER3
SIM_IO 4
5
6
I/O CLK
VPP RST
GND VCC
3 SIM_CLK
2 SIM_RST
1 SIM_VCC
U4
GND
Software Serial or UART
U1
A0 RX
A1 TX
A2
A3 D2
A4 D3
A5 D4
D5
RES D6
VIN D7
5V D8
3.3V D9
AREF D10
GND D11
GND D12
GND D13
RX-I
TX-O
TXD0
RXD0
JP4
JUMPER-31-2
JP6
JUMPER-32-3
RESET
VRAW
S1
GND
ARDUINO_SHIELDNOHOLES
VCC
SM5100B
VBAT AUX_SPKN
VBAT AUX_MICN
VBAT AUX_SPKP
VBAT AUX_MICP
RTC_BATT EAR_MICN
VCHG EAR_MICP
VCHG EAR_SPKN
EAR_SPKP
VCC
VCC
KEY_DRV0
KEY_DRV1
POWER_ON KEY_DRV2
RESET KEY_DRV3
KEY_DRV4
TXD0 KEY_DRV5
RXD0
TXD1 KEY_SEN0
RXD1 KEY_SEN1
KEY_SEN2
SIM_VCC KEY_SEN3
SIM_DA
SIM_CLK GPIO_1
SIM_RST GPIO_3
GPIO_4
ADIN1 GPIO_6
ADIN2 GPIO_8
GPIO_9
GPO_11 GPIO_10
GPO42/NBOOT GPIO_16
GPIO_17
GND GPIO_18
GND GPIO_19
GND GPIO_20
GND GPIO_26
GND GPIO_46
U3
RESET
TXD0
RXD0
SIM_VCC
SIM_IO
SIM_CLK
SIM_RST
BOOT
MIC_N
MIC_P
SPK_N
SPK_P
JP5
GND
VCC
10K
R3
U2
VRAW
VIN VOUT
ENABLE GND GND ADJUST
SPX29302
~3.8V Output
R1 22K
R2 10K
C5 100uF
C3 0.1uF
LED1 Red
R6 330
GND
SFE
TITLE: cellular shield-v12
Document Number:
REV:
Date: 1/19/2010 4:27:42 PM
Sheet: 1/1