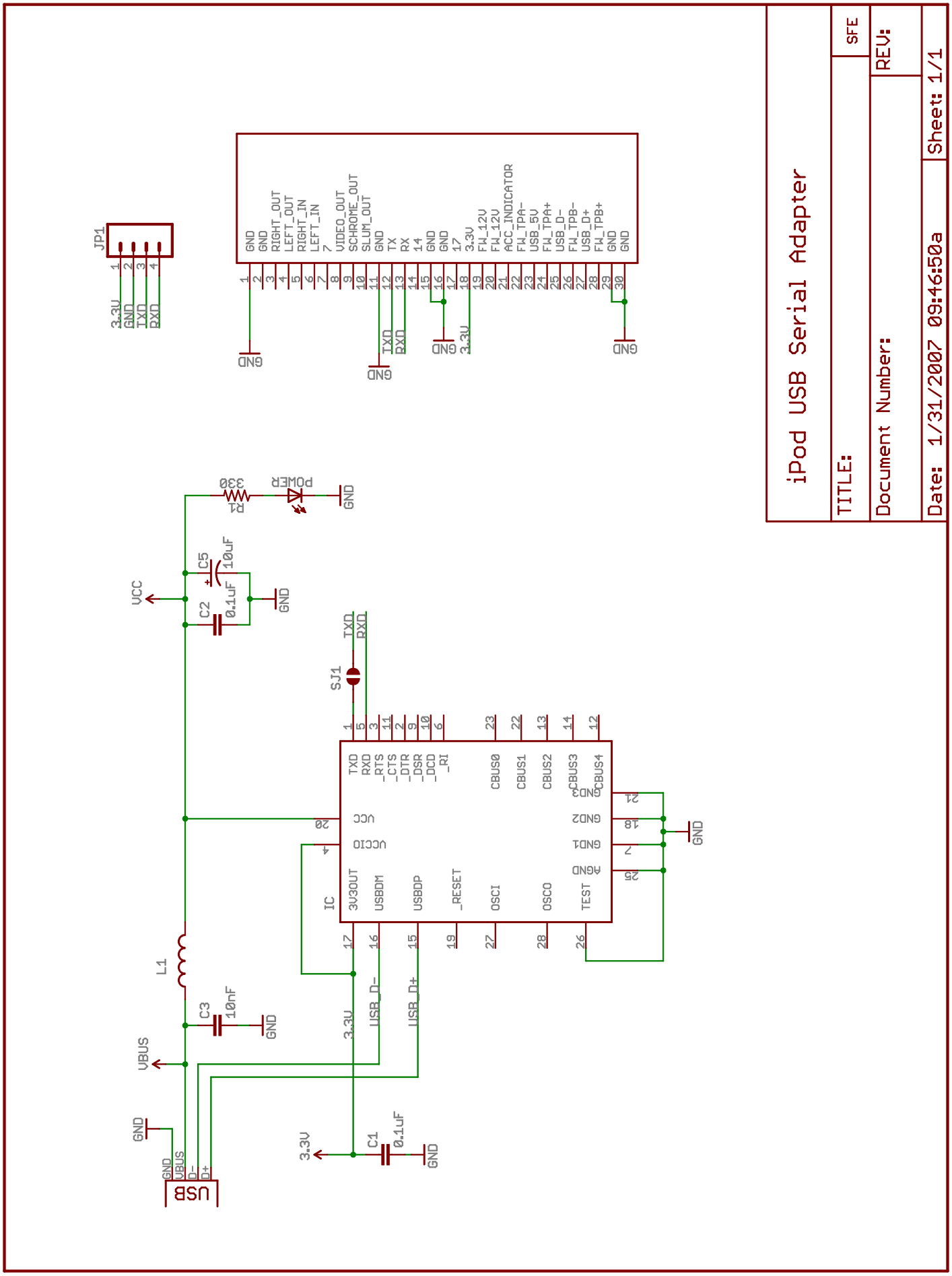
iPod USB Serial Adapter
TITLE:
SFE
Document Number:
REV:
Date: 1/31/2007 09:46:50a
Sheet: 1/1
JP1
3.3V
GND
TXD
RXD
GND
GND
RIGHT_OUT
LEFT_OUT
RIGHT_IN
LEFT_IN
7
VIDEO_OUT
SCHROME_OUT
SLUM_OUT
GND
TX
RX
14
GND
GND
17
3.3V
FW_12V
FW_12V
ACC_INDICATOR
FW_TPA-
USB_5V
FW_TPA+
USB_D-
FW_TPB-
USB_D+
FW_TPB+
GND
GND
POWER
R1
330
C5
10uF
C2
0.1uF
VCC
SJ1
IC
TXD
RXD
_RTS
_CTS
_DTR
_DSR
_DCD
_RI
CBUS0
CBUS1
CBUS2
CBUS3
CBUS4
VCCIO
3V3OUT
USBDM
USBDP
_RESET
OSCI
OSCO
TEST
AGND
GND1
GND2
GND3
L1
C3
10nF
VBUS
USB
C1
0.1uF
USB_D-
USB_D+