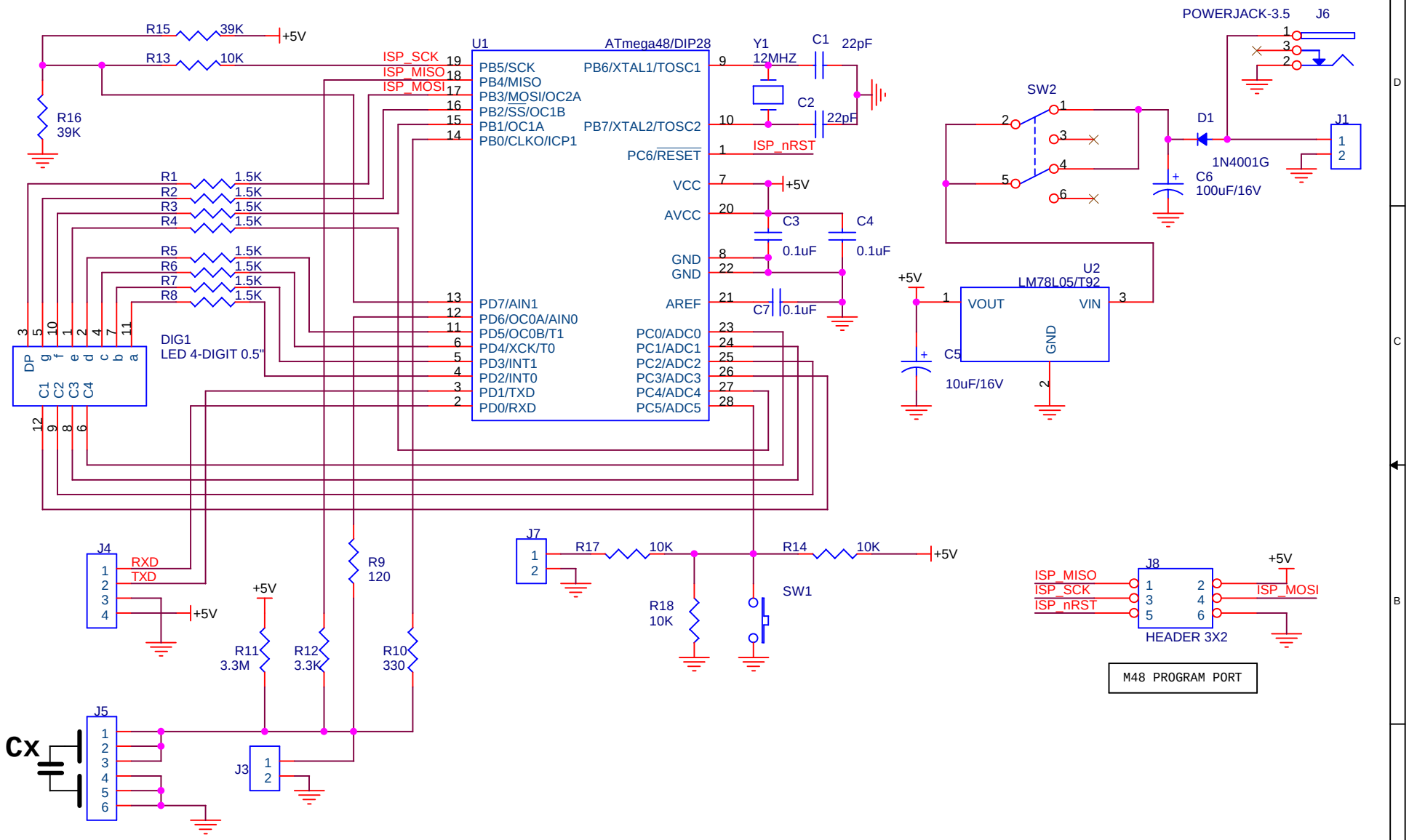

今越电子制作 WWW.JYETECH.COM

Title: Cap Meter

Size: A | Document Number: 105-06000-00B | Rev: 00B

Date: Sunday, November 09, 2008 | Sheet 1 of 2