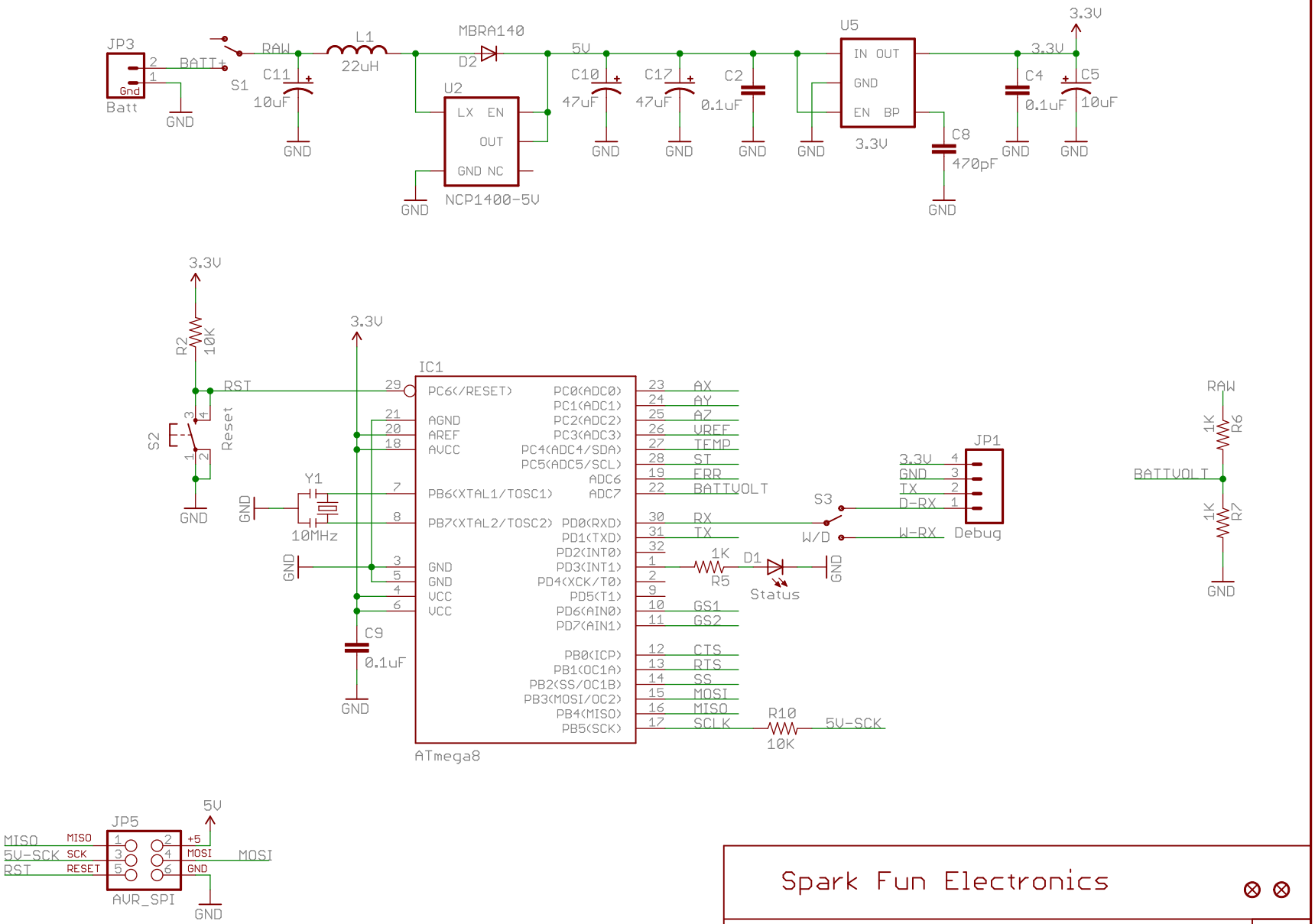

Spark Fun Electronics

TITLE: WiTilt-v34

SFE

Document Number:

REV: 1

Date: 8/21/2008 5:06:05 PM

Sheet: 1/2

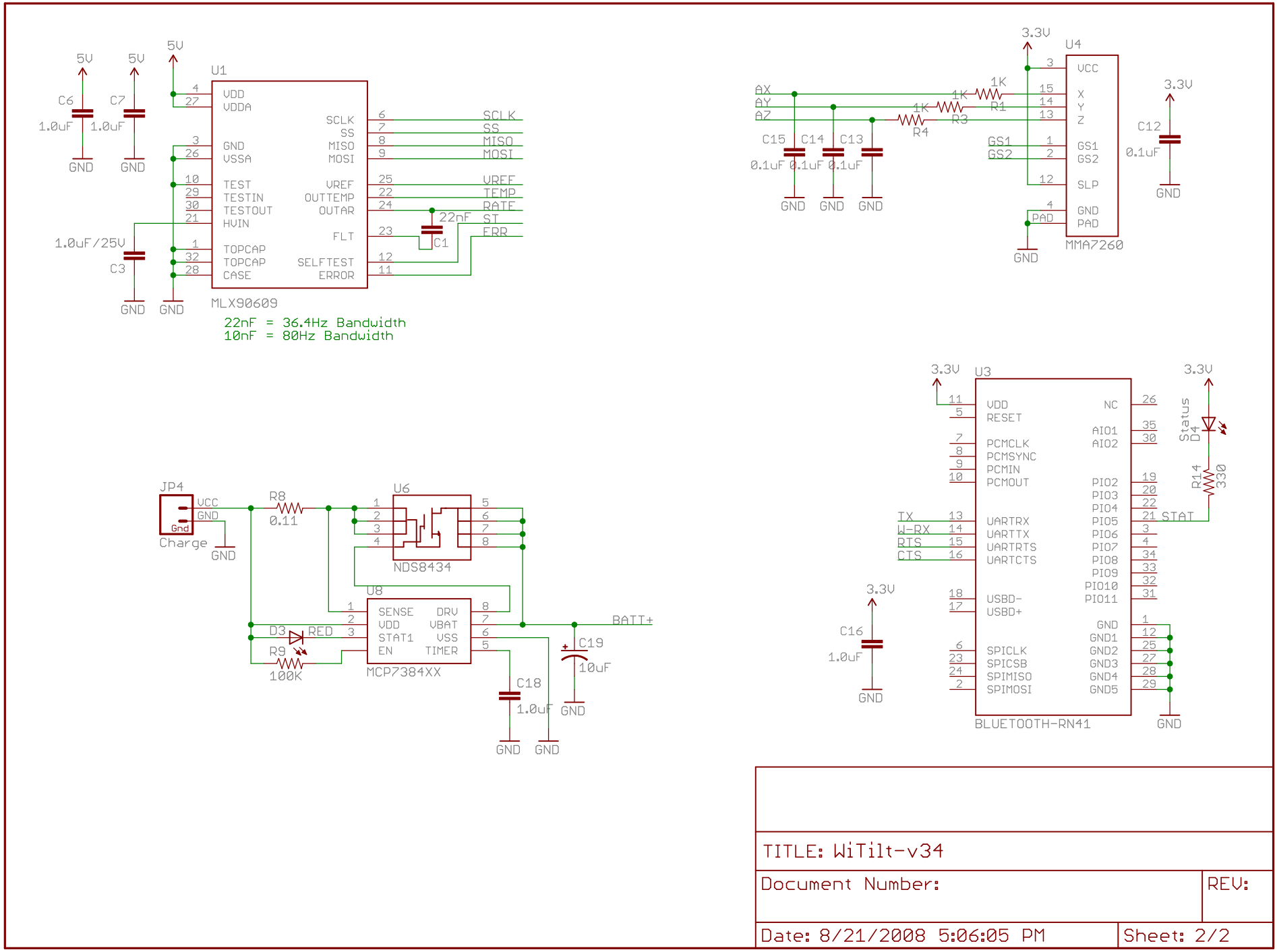

TITLE: WiTilt-v34

Document Number:

REV:

Date: 8/21/2008 5:06:05 PM

Sheet: 2/2